Counters

Submitted by:

Name	ID
Nawaf Alabdi	B00093759
Ali Abdelatief	B00099836

Submitted to:

Ms. Salsabeel Shapsough

Lab Instructor

American University of Sharjah

College of Engineering

Submitted on:

24/11/2024

Abstract

In this lab we will be using JK and D flip flops to build two synchronous counter circuits on LogiSim.

Introduction

In this lab, we will design a counter that counts odd numbers from 1 to 11 and then repeats using clocked JK Flipflops and implement it on LogiSim to verify its operation. Afterwards, we will design another counter using clocked D Flipflops that counts even numbers from 0 to 6 and then repeats. We will also implement it on LogiSim in the same fashion.

Theoretical Background

A Flip flop is a digital circuit that is used to store binary state, like memory and is the building block of sequential circuits, which are dependent on the input and the current state of the circuit. In contrast to latches, flip flops are edge-triggered, meaning they only change states during the positive-edge of the clock or the negative-edge of the clock, depending on the chip.

A JK Flip flop has two inputs, J & K. J is the setter (Q = 1) while K is the reset (Q = 0).

If (J,K) = (1,0), Q is set to 1. While if (J, K) = (0,1), Q is set to 0.

Disabling both inputs (J,K) = (0,0) **retains** the previous state of Q, while enabling both inputs (J,K) = (1,1) **inverts** the previous state of Q.

We define the transition of the JK flip-flop's outputs based on their inputs J & K, using an excitation table.

PRESENT STATE	NEXT STATE	J	K
0	0	0	X
0	1	1	X
1	1	X	0
1	0	X	1

A D Flip flop has one input, D.

Disabling the input (setting D = 0) resets the output Q = 0.

Enabling the input (setting D = 1) sets the output to Q = 1.

We define the transition of the the D flip flop's output based on the input D using an excitation table.

PRESENT STATE	NEXT STATE	D
0	0	0
0	1	1
1	1	1
1	0	0

A counter is a synchronous sequential circuit that outputs a specific finite sequence of integers in a cyclical way. Each bit from the number in the sequence is represented using a flipflop, which transitions between states using the excitation table to form the next number in the cyclical sequence.

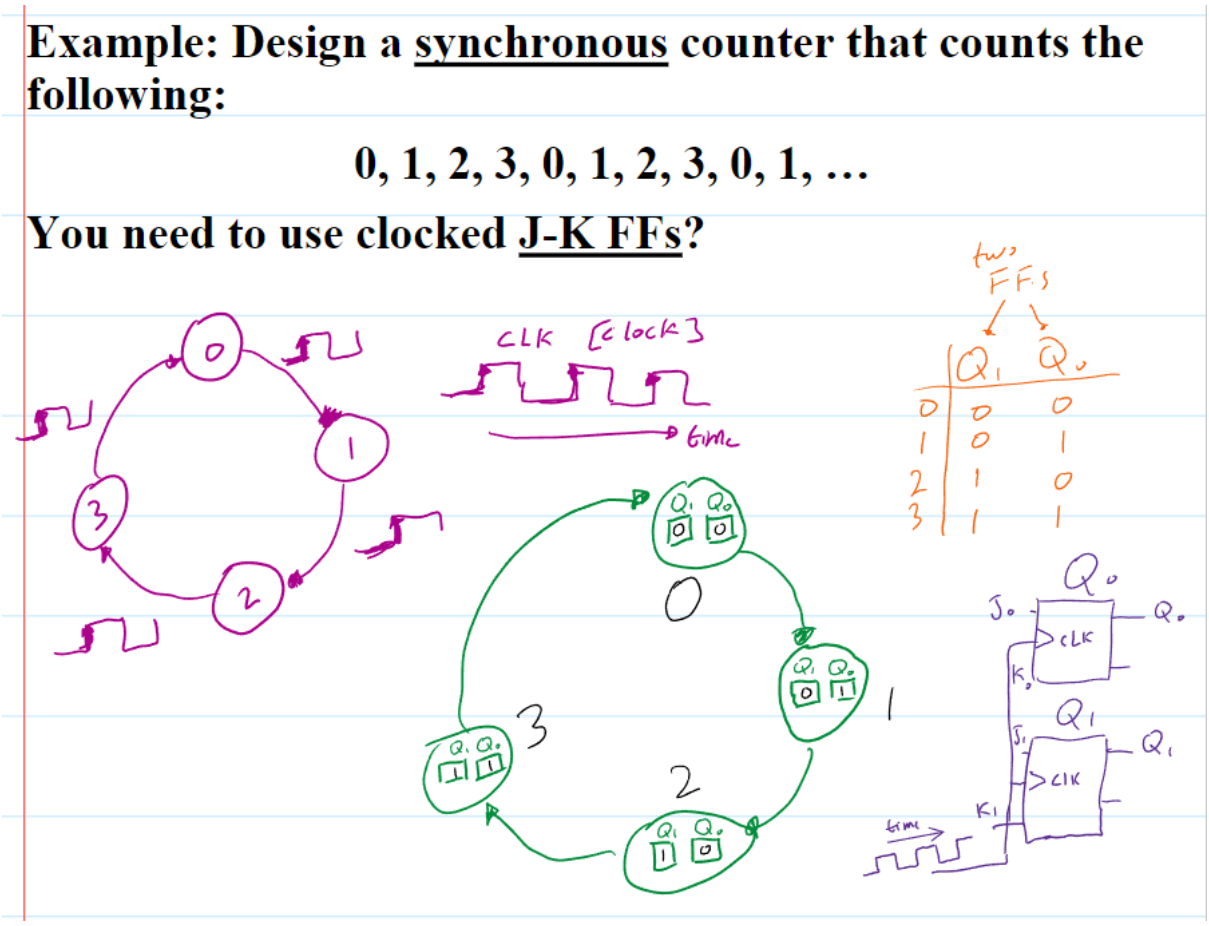

We design counters by first defining the states of the counter, then draw a table to find the required inputs to move the flipflops to represent the next integer in the sequence. The inputs required to transform the sequence of bits (flipflops) are found using the excitation table.

Experimental work, Results and Discussion

Lab Assignments:

Exercise 1:

Design a synchronous counter to perform odd counting from 1 to 11 and then repeat. This will require four flip-flops A, B, C, D. Use the design procedure described in the lab by applying the six steps mentioned before. Use the following J-K transition table to help you in the design.

Hint: After 11 the counter goes back to 1

The excitation table for the JK FF is given below:

1 -> 3 -> 5 -> 7 -> 9 -> 11

0001 -> 0011 -> 0101 -> 0111 -> 1001 -> 1011

PRESENT STATE	NEXT STATE	J	K
0	0	0	X
0	1	1	X
1	1	X	0
1	0	X	1

Current State					Next State				Flip Flops inputs							
Dec	A	B	C	D	An	Bn	Cn	Dn	JA	KA	JB	KB	JC	KC	JD	KD
0	0	0	0	0	X	X	X	X	X	X	X	X	X	X	X	X
1	0	0	0	1	0	0	1	1	0	X	0	X	1	X	X	0
2	0	0	1	0	X	X	X	X	X	X	X	X	X	X	X	X
3	0	0	1	1	0	1	0	1	0	X	1	X	X	1	X	0
4	0	1	0	0	X	X	X	X	X	X	X	X	X	X	X	X
5	0	1	0	1	0	1	1	1	0	X	X	0	1	X	X	0
6	0	1	1	0	X	X	X	X	X	X	X	X	X	X	X	X
7	0	1	1	1	1	0	0	1	1	X	X	1	X	1	X	0
8	1	0	0	0	X	X	X	X	X	X	X	X	X	X	X	X
9	1	0	0	1	1	0	1	1	X	0	0	X	1	X	X	0
10	1	0	1	0	X	X	X	X	X	X	X	X	X	X	X	X
11	1	0	1	1	0	0	0	1	X	1	0	X	X	1	X	0
12	1	1	0	0	X	X	X	X	X	X	X	X	X	X	X	X
13	1	1	0	1	X	X	X	X	X	X	X	X	X	X	X	X
14	1	1	1	0	X	X	X	X	X	X	X	X	X	X	X	X
15	1	1	1	1	X	X	X	X	X	X	X	X	X	X	X	X

	C'D' 00	C'D 01	CD 11	CD' 10
A'B' 00	X	0	0	X
A'B 01	X	0	1	X
AB 11	X	X	X	X
AB' 10	X	X	X	X

$JA = BC$

	C'D' 00	C'D 01	CD 11	CD' 10
A'B' 00	X	X	X	X
A'B 01	X	X	X	X
AB 11	X	X	X	X
AB' 10	X	0	1	X

$KA = C$

	C'D' 00	C'D 01	CD 11	CD' 10
A'B' 00	X	0	1	X
A'B 01	X	X	X	X
AB 11	X	X	X	X
AB' 10	X	0	0	X

$JB = A'C$

	C'D' 00	C'D 01	CD 11	CD' 10
A'B' 00	X	X	X	X
A'B 01	X	0	1	X
AB 11	X	X	X	X
AB' 10	X	X	X	X

$KB = C$

	C'D' 00	C'D 01	CD 11	CD' 10
A'B' 00	X	1	X	X
A'B 01	X	1	X	X
AB 11	X	X	X	X
AB' 10	X	1	X	X

$JC = 1$

	C'D' 00	C'D 01	CD 11	CD' 10
A'B' 00	X	X	1	X
A'B 01	X	X	1	X
AB 11	X	X	X	X
AB' 10	X	X	1	X

$KC = 1$

	C'D' 00	C'D 01	CD 11	CD' 10
A'B' 00	X	X	X	X
A'B 01	X	X	X	X
AB 11	X	X	X	X
AB' 10	X	X	X	X

$JD = 1$

	C'D' 00	C'D 01	CD 11	CD' 10
A'B' 00	X	0	0	X
A'B 01	X	0	0	X
AB 11	X	X	X	X
AB' 10	X	0	X	0

$KD = 0$

Implement the circuit on the LogiSim to verify your solution. Use a bushbutton for the clock.

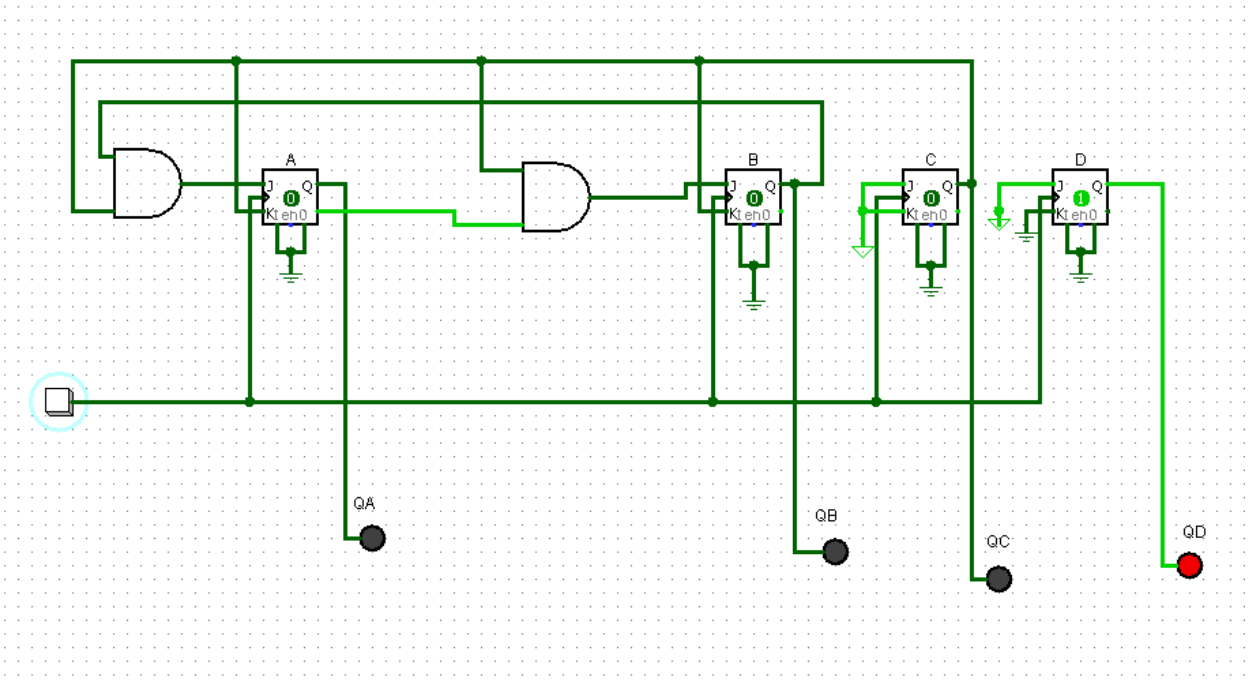
A
J
Q
Kteh0
B
J
Q
Kteh0
C
J
Q
Kteh0
D
J
Q
Kteh0
QA
QB
QC
QD

Exercise 2:

Design a synchronous counter to perform even counting from 0 to 6 and then repeat using D-FlipFlop. This will require three flip-flops D2, D1, D0. Use the design procedure described in the lab by applying the six steps mentioned before. Use the following D-FF transition table to help you in the design.

Hint: After 6 the counter goes back to 0

The excitation table for the D-FF is given below:

0 -> 2 -> 4 -> 6

000 -> 010 -> 100 -> 110

PRESENT STATE	NEXT STATE	D
0	0	0
0	1	1
1	1	1
1	0	0

Current State				Next State			Flip Flop Inputs		
Dec	Q2	Q1	Q0	Q2	Q1	Q0	D2	D1	D0
0	0	0	0	0	1	0	0	1	0
1	0	0	1	x	x	X	X	X	X
2	0	1	0	1	0	0	1	0	0
3	0	1	1	x	x	X	X	X	X
4	1	0	0	1	1	0	1	1	0
5	1	0	1	X	x	x	X	X	X
6	1	1	0	0	0	0	0	0	0
7	1	1	1	x	x	x	x	x	x

	B'C' 0 0	B'C 0 1	BC 1 1	BC' 1 0
A' 0	0	X	X	1
A 1	1	X	X	0

D2 = AB' + A'B = A XOR B

	B'C' 0 0	B'C 0 1	BC 1 1	BC' 1 0
A' 0	1	X	X	0
A 1	1	X	X	0

D1 = B'

	B'C' 0 0	B'C 0 1	BC 1 1	BC' 1 0
A' 0	0	X	X	0
A 1	0	X	X	0

D0 = 0

Implement the circuit on the breadboard to verify your solution. Use a pushbutton for the clock.

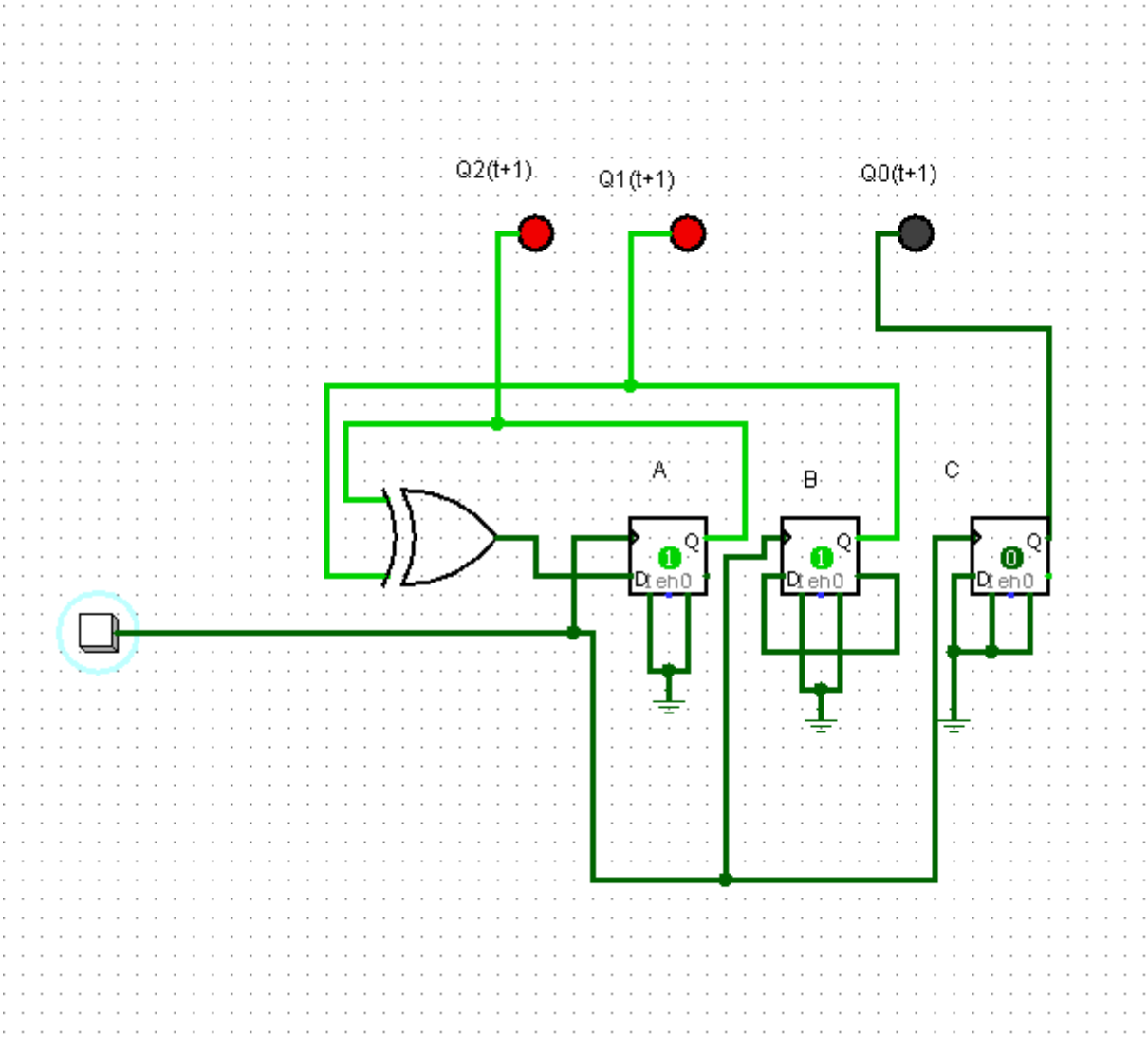

Conclusion

In this lab, we went over counters using JK and D flipflops, and we used them to create two different counters – an odd counter and an even counter – and implemented them on LogiSim to ensure their operation is correct.